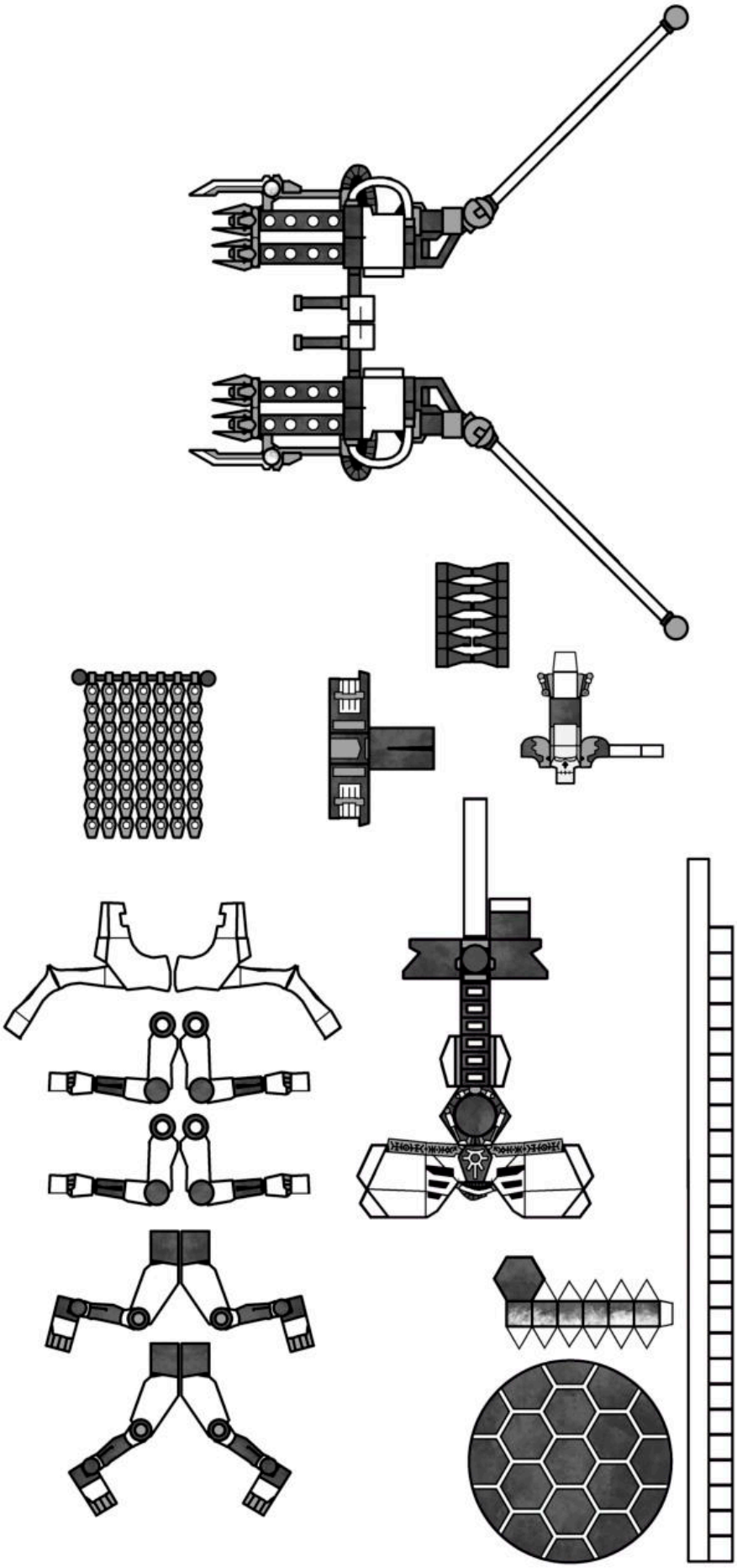

ROYAL WARDEN